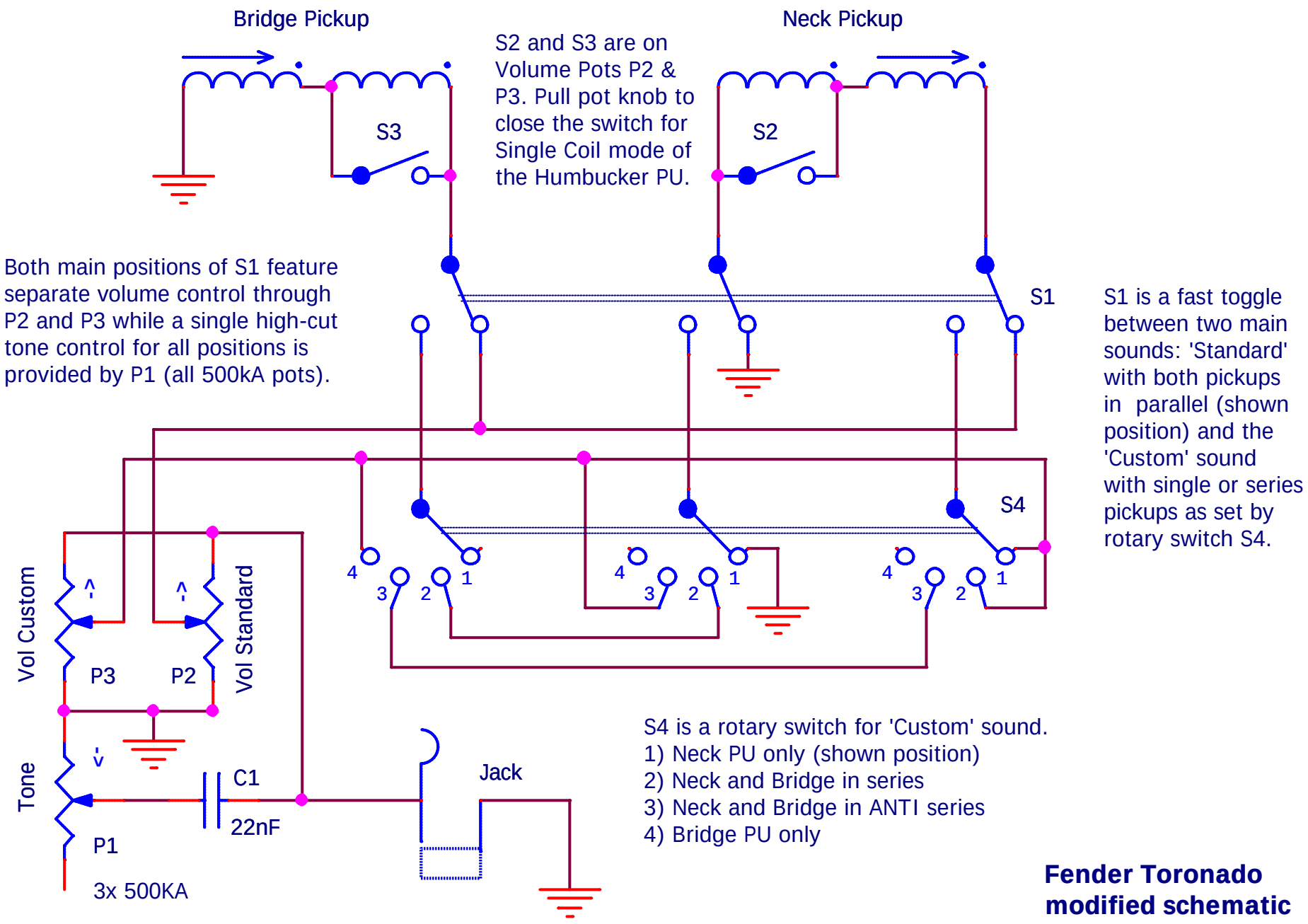

Fender Toronado modified schematic

(c) 2008 - JvN - www.vns.nl